INTERNATIONAL STANDARD

ISO 13926-3

Second edition
2019-05

Pen systems —

Part 3: Seals for pen-injectors for medical use

Systèmes de stylos-injecteurs —

Partie 3: Joints pour stylos-injecteurs à usage médical

iTeh STANDARD PREVIEW
(standards.iteh.ai)

ISO 13926-3:2019
https://standards.iteh.ai/catalog/standards/sist/54639485-dbc7-4c28-9d11-af49c14faa30/iso-13926-3-2019

Reference number
ISO 13926-3:2019(E)

© ISO 2019

iTeh STANDARD PREVIEW
(standards.iteh.ai)

ISO 13926-3:2019
https://standards.iteh.ai/catalog/standards/sist/54639485-dbc7-4c28-9d11-af49c14faa30/iso-13926-3-2019

COPYRIGHT PROTECTED DOCUMENT

© ISO 2019

All rights reserved. Unless otherwise specified, or required in the context of its implementation, no part of this publication may be reproduced or utilized otherwise in any form or by any means, electronic or mechanical, including photocopying, or posting on the internet or an intranet, without prior written permission. Permission can be requested from either ISO at the address below or ISO's member body in the country of the requester.

ISO copyright office
CP 401 • Ch. de Blandonnet 8
CH-1214 Vernier, Geneva
Phone: +41 22 749 01 11
Fax: +41 22 749 09 47
Email: copyright@iso.org
Website: www.iso.org

Published in Switzerland

Contents

Page

Foreword ... **iv**
Introduction ... **v**
1 Scope ... **1**
2 Normative references ... **1**
3 Terms and definitions ... **1**
4 Classification ... **2**
5 Shape and dimensions ... **2**
6 Designation ... **3**
7 Material ... **3**
7.1 Cap ... 3
7.2 Disc ... 3
8 Requirements ... **3**
8.1 General ... 3
8.2 Physical requirements ... 3
8.2.1 Hardness of the disc ... 3
8.2.2 Fragmentation ... 4
8.2.3 Freedom from leakage ... 4
8.2.4 Resealability ... 4
8.2.5 Resistance to ageing ... 4
8.3 Chemical requirements ... 4
8.4 Biological requirements ... 4
9 Labelling ... **4**
Annex A (normative) **Leakage test** ... **5**
Bibliography ... **7**

iTeh STANDARD PREVIEW
(standards.iteh.ai)
ISO 13926-3:2019
https://standards.iteh.ai/catalog/standards/sist/54639485-dbc7-4c28-9d11-af49c14faa30/iso-13926-3-2019

Foreword

ISO (the International Organization for Standardization) is a worldwide federation of national standards bodies (ISO member bodies). The work of preparing International Standards is normally carried out through ISO technical committees. Each member body interested in a subject for which a technical committee has been established has the right to be represented on that committee. International organizations, governmental and non-governmental, in liaison with ISO, also take part in the work. ISO collaborates closely with the International Electrotechnical Commission (IEC) on all matters of electrotechnical standardization.

The procedures used to develop this document and those intended for its further maintenance are described in the ISO/IEC Directives, Part 1. In particular, the different approval criteria needed for the different types of ISO documents should be noted. This document was drafted in accordance with the editorial rules of the ISO/IEC Directives, Part 2 (see www.iso.org/directives).

Attention is drawn to the possibility that some of the elements of this document may be the subject of patent rights. ISO shall not be held responsible for identifying any or all such patent rights. Details of any patent rights identified during the development of the document will be in the Introduction and/or on the ISO list of patent declarations received (see www.iso.org/patents).

Any trade name used in this document is information given for the convenience of users and does not constitute an endorsement.

For an explanation of the voluntary nature of standards, the meaning of ISO specific terms and expressions related to conformity assessment, as well as information about ISO's adherence to the World Trade Organization (WTO) principles in the Technical Barriers to Trade (TBT) see www.iso.org/iso/foreword.html.

iTeh STANDARD PREVIEW
(standards.iteh.ai)

This document was prepared by Technical Committee ISO/TC 76, *Transfusion, infusion and injection, and blood processing equipment for medical and pharmaceutical use*.

ISO 13926-3:2019
https://standards.iteh.ai/catalog/standards/sist/54639485-dbc7-4c28-9d11-
a8f9b14fa305/iso-13926-3-2019

This second edition cancels and replaces the first edition (ISO 13926-3:2012), which has been technically revised. The main changes compared to the previous edition are as follows:

— extension of the nature of cap in 7.1;

— deletion of one reference to a minimum requirement in 8.1;

— change of the reference in 8.2.2 to a needle for medical use;

— complete editorial revision.

A list of all parts in the ISO 13926 series can be found on the ISO website.

Any feedback or questions on this document should be directed to the user's national standards body. A complete listing of these bodies can be found at www.iso.org/members.html.

 © ISO 2019 – All rights reserved

Introduction

Primary packaging components made of elastomeric materials are an integral part of medicinal products. As such, the principles of current Good Manufacturing Practices (cGMP) are applicable to the manufacturing of these components.

Principles of cGMP are described, for example, in ISO 15378.

iTeh STANDARD PREVIEW
(standards.iteh.ai)

ISO 13926-3:2019
https://standards.iteh.ai/catalog/standards/sist/54639485-dbc7-4c28-9d11-af49c14faa30/iso-13926-3-2019

© ISO 2019 – All rights reserved

iTeh STANDARD PREVIEW
(standards.iteh.ai)

ISO 13926-3:2019
https://standards.iteh.ai/catalog/standards/sist/54639485-dbc7-4c28-9d11-af49c14faa30/iso-13926-3-2019

Pen systems —

Part 3:
Seals for pen-injectors for medical use

1 Scope

This document specifies the shape, dimensions, material, performance requirements and labelling of seals for pen-injectors for medical use.

NOTE The potency, purity, stability and safety of a medicinal product during its manufacture and storage can be significantly affected by the nature and performance of the primary packaging.

2 Normative references

The following documents are referred to in the text in such a way that some or all of their content constitutes requirements of this document. For dated references, only the edition cited applies. For undated references, the latest edition of the referenced document (including any amendments) applies.

iTeh STANDARD PREVIEW
(standards.iteh.ai)

ISO 3302 (all parts), *Rubber — Tolerances for products*

ISO 48-4, *Rubber, vulcanized or thermoplastic — Determination of hardness — Part 4: Indentation hardness by durometer method (Shore hardness)*

ISO 13926-3:2019
https://standards.iteh.ai/catalog/standards/sist/94039483-dbc7-4e28-9d11-af49c14fba30/iso-13926-3-2019

ISO 7864, *Sterile hypodermic needles for single use — Requirements and test methods*

ISO 8871-1, *Elastomeric parts for parenterals and for devices for pharmaceutical use — Part 1: Extractables in aqueous autoclavates*

ISO 8871-4, *Elastomeric parts for parenterals and for devices for pharmaceutical use — Part 4: Biological requirements and test methods*

ISO 8871-5:2016, *Elastomeric parts for parenterals and for devices for pharmaceutical use — Part 5: Functional requirements and testing*

ISO 8872, *Aluminium caps for transfusion, infusion and injection bottles — General requirements and test methods*

ISO 11608-3, *Needle-based injection systems for medical use — Requirements and test methods — Part 3: Finished containers*

ISO 13926-1, *Pen systems — Part 1: Glass cylinders for pen-injectors for medical use*

ISO 13926-2, *Pen systems — Part 2: Plunger stoppers for pen-injectors for medical use*

3 Terms and definitions

No terms and definitions are listed in this document.

ISO and IEC maintain terminological databases for use in standardization at the following addresses:

— ISO Online browsing platform: available at https://www.iso.org/obp

— IEC Electropedia: available at http://www.electropedia.org/

© ISO 2019 – All rights reserved

4 Classification

Seals shall be classified as follows:

— type A: seals with a mono-layer disc;

— type B: seals with a double-layer disc.

5 Shape and dimensions

5.1 The shapes and dimensions of seals shall be as shown in Figure 1 and as given in Table 1.

Dimensions in millimetres

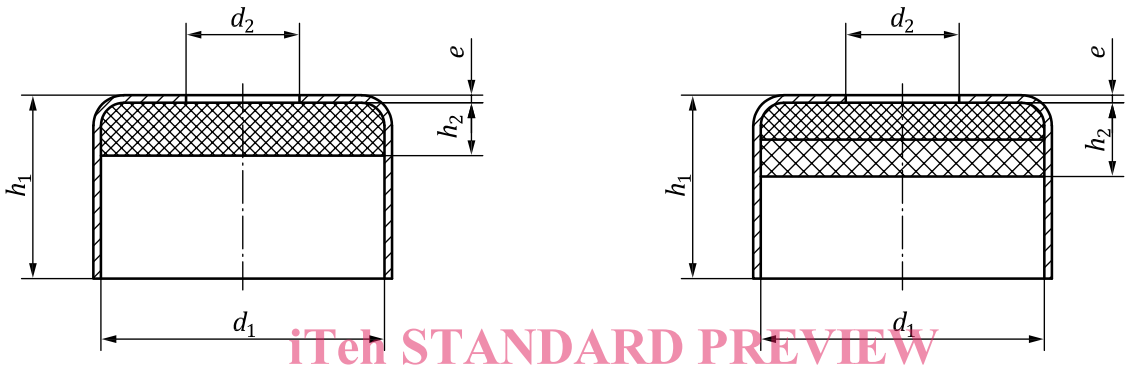

a) Type A — Seal with a mono-layer disc **b) Type B — Seal with a double-layer disc**

iTeh STANDARD PREVIEW
(standards.iteh.ai)
ISO 13926-3:2019
https://standards.iteh.ai/catalog/standards/sist/54639485-dbc7-4c28-9d11-af49c14faa30/iso-13926-3-2019

Key

h_1 total cap height

h_2 thickness of disc

d_1 inner cap diameter

d_2 bore diameter

e aluminium shell thickness

Figure 1 — Shape and dimensions of seals for pen-injectors for medical use

Table 1 — Dimensions of seals

Dimensions in millimetres

Nominal size	Type	Total cap height[a] h_1 ±0,15	Thickness of disc h_2 ±0,15	Inner cap diameter d_1 ±0,05	Bore diameter d_2 ±0,2	Thickness of aluminium[b] e min	max
7,5	A	4,85 to 4,9	1,3 to 1,5	7,5	3,0	0,15	0,25
7,5	B	4,85 to 5,3	1,45 to 1,95	7,5	3,0		

[a] The height of the seal depends on the thickness and hardness of the disc.

[b] The thickness of aluminium shall be agreed upon between the manufacturer and the user. It shall not differ from the nominal value by more than ±0,02 mm. The extreme limits are given without tolerance.

5.2 For type B seals, both single layers shall be continuous. The ratio of thickness of the single layers shall be agreed upon between the supplier and the user.

© ISO 2019 – All rights reserved

5.3 The diameter of the rubber discs shall be such that a sufficient press-fit in the aluminium cap is achieved and that the discs cannot fall out.

5.4 If not otherwise specified, general dimensional tolerances shall be in accordance with the ISO 3302 series.

5.5 The surface of the discs can be structured in order to avoid sticking.

6 Designation

Seals can be designated according to their type (see Clause 4 and Figure 1). The designation shall be expressed as the word "Seal", followed by a reference to this document, followed by the nominal size, followed by the type letter.

EXAMPLE Designation of a seal type A (mono-layer disc) for a nominal head size of the cartridge of 7,5 mm complying with the requirements in this document:

Seal ISO 13926-3 – 7,5 – A

7 Material

7.1 Cap

iTeh STANDARD PREVIEW
(standards.iteh.ai)

General requirements for aluminium caps shall be in accordance with ISO 8872.

In addition, the cap shall be anodized or suitably coated, e.g. with a lacquer.

7.2 Disc

ISO 13926-3:2019
https://standards.iteh.ai/catalog/standards/sist/54639485-dbc7-4c28-9d11-
e8f0c1f6a30/iso-13926-3-2019

Discs shall be made from the elastomeric formulation originally tested and approved by the end user. The manufacturer of the discs shall ensure conformance of each delivery with the type sample and compliance with previously agreed functional and compendial requirements.

The elastomeric material shall withstand two sterilization cycles when autoclaving in saturated steam at (121 ± 2) °C for 30 min without impairment of its function under the conditions of normal use. In case of other sterilization methods, e.g. irradiation, the suitability of the material shall be evaluated.

8 Requirements

8.1 General

The requirements specified in 8.2 and 8.3 represent the minimum for the condition of the seals on receipt by the user.

8.2 Physical requirements

8.2.1 Hardness of the disc

The hardness agreed between the manufacturer and the user shall not differ from the nominal value by more than ±5 Shore A when tested in accordance with ISO 48-4 on a special test specimen. Alternatively, the hardness can be tested on the discs according to ISO 48-2. If tested according to ISO 48-2, the micro-hardness shall not differ by more than ±5 IRHD from the type sample.

The manufacturer should provide suitable test specimens upon request.

© ISO 2019 – All rights reserved